5. Rear Axle

A: REMOVAL

1) Disconnect the ground cable from the battery.
2) Lift up the vehicle, then remove the rear wheels.
3) Lift the crimped section of axle nut.
4) While applying the parking brake, remove the axle nut using a socket wrench.

CAUTION:
Remove the axle nut while there is no load being applied to the axle. Failure to do so may damage the wheel bearings.

5) Return the parking brake lever and loosen the adjusting nut.

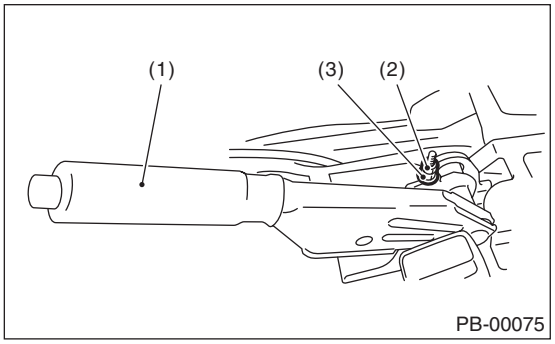

(1) Parking brake lever
(2) Lock nut
(3) Adjusting nut

6) Remove the disc brake caliper from the back plate, and suspend it from strut using a piece of wire.

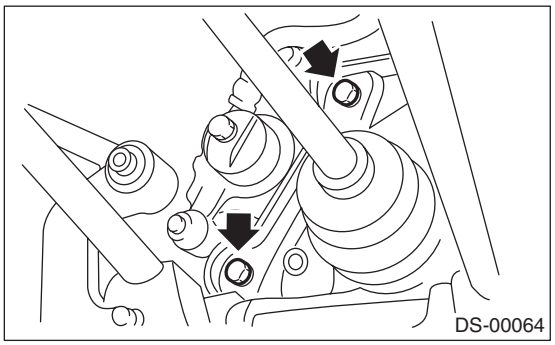

7) Remove the disc rotor from the hub.

NOTE:
If it is difficult to remove the disc rotor from the hub, drive the 8 mm bolt into the threaded end of rotor, and then remove the rotor.

8) Disconnect the parking brake cable end.

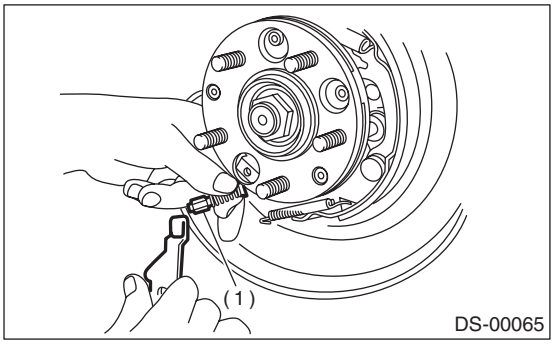

(1) Cable end

9) Disconnect the rear stabilizer from the rear lateral link.
10) Remove the bolts which secure trailing link assembly to the rear housing.

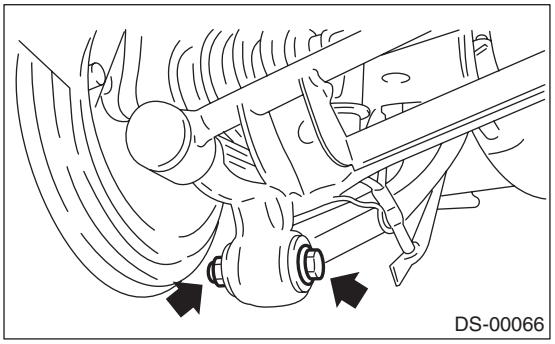

11) Remove the bolts which secure the lateral assembly to the rear housing.

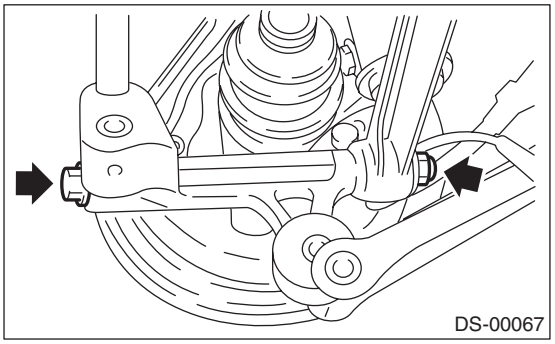

12) Remove the rear ABS wheel speed sensor from the back plate.

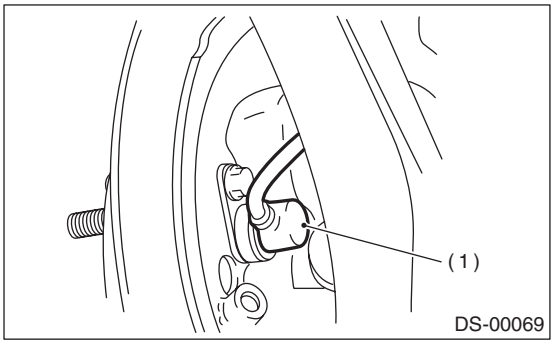

(1) ABS wheel speed sensor

13) Disengage the BJ from the housing splines, and remove the rear drive shaft assembly.
If it is hard to remove, use the ST.

ST1	926470000	AXLE SHAFT PULLER
ST2	28099PA110	AXLE SHAFT PULLER PLATE

NOTE:
- Be careful not to damage the oil seal lip when removing the rear drive shaft.
- When rear drive shaft is to be replaced, replace inner oil seal with a new seal.

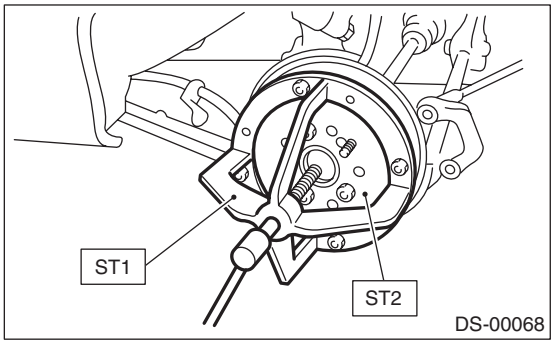

14) Remove the bolts which secure the rear housing to strut, and separate the two.

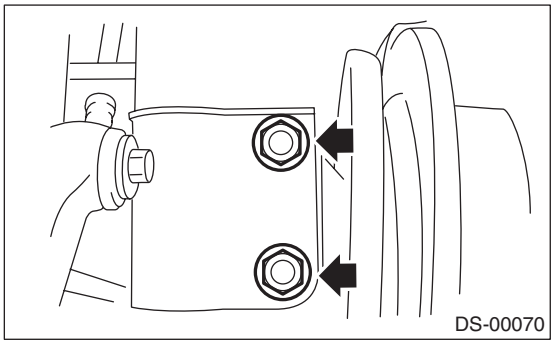

B: INSTALLATION

1) Temporarily tighten the rear axle to the strut.
2) Insert the rear drive shaft into the rear axle.

NOTE:
Be careful not to damage the inner oil seal lip.

3) Tighten the axle nut temporarily.
4) Using new self-locking nuts, temporary attach the rear housing assembly and the lateral link assembly.

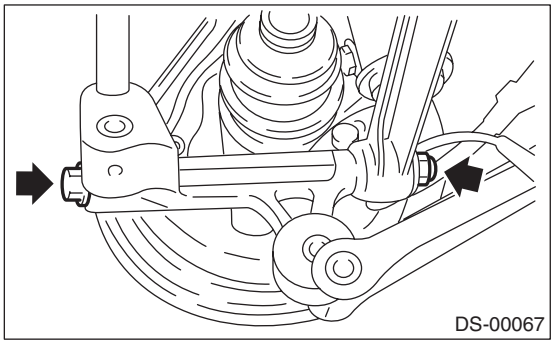

5) Using new self-locking nuts, temporary attach the rear housing assembly and the trailing link assembly.

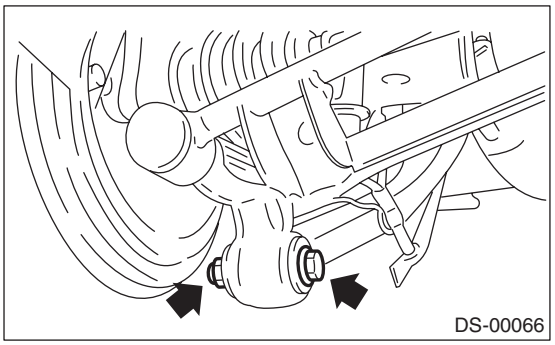

6) Using new self-locking nuts, secure the rear housing assembly and the strut assembly.

Tightening torque:
200 N·m (20.0 kgf-m, 145 ft-lb)

7) Using new self-locking nuts, install the rear stabilizer and rear lateral link.

Tightening torque:
45 N·m (4.5 kgf-m, 33.2 ft-lb)

8) Connect the parking brake cable to the parking brake.
9) Install the disc rotor on the rear housing assembly.
10) Install the disc brake caliper on the back plate.

Tightening torque:
Except for STI model
53 N·m (5.4 kgf-m, 39.1 ft-lb)
STI model
65 N·m (6.6 kgf-m, 47.9 ft-lb)

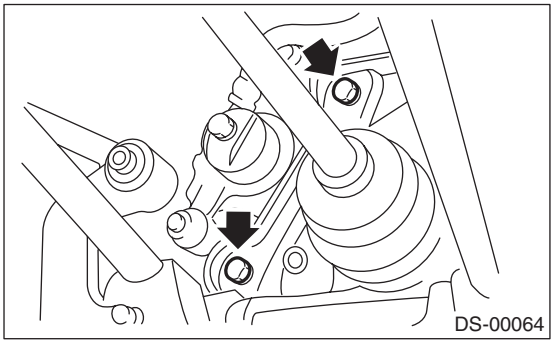

11) Adjust the parking brake lever stroke by turning the adjuster.
12) While applying the parking brake, tighten the new axle nut using the socket wrench. After tightening, crimp the axle nut.

Tightening torque:
190 N·m (19.4 kgf-m, 140 ft-lb)

CAUTION:
Do not overtighten it as this may damage the wheel bearing.

13) Install the rear ABS wheel speed sensor.

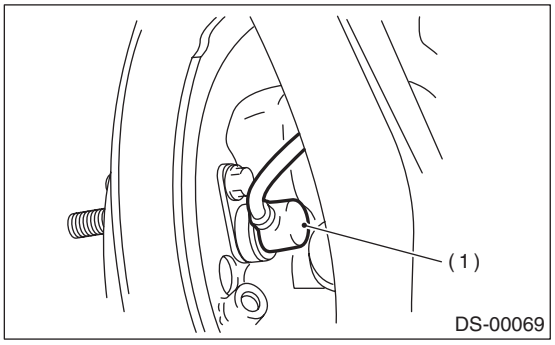

(1) ABS wheel speed sensor

14) Install the wheel and tighten the wheel nuts to specified torque.

Tightening torque:
100 N·m (10.2 kgf-m, 73.8 ft-lb)

15) Make the tires completely touch the ground.

CAUTION:
Always tighten the stabilizer bushing in the state where the vehicle is at curb weight and the wheels are in full contact with the ground.

16) Tighten the rear housing assembly and lateral link assembly installation bolts.

Tightening torque:
140 N·m (14.3 kgf-m, 103 ft-lb)

17) Tighten the rear housing assembly and trailing link assembly installation bolts.

Tightening torque:
90 N·m (9.2 kgf-m, 66 ft-lb)

C: DISASSEMBLY

1) Using ST1 and ST2, remove the hub from the rear housing.

ST1	927080000	HUB STAND (Except for STI model)
ST1	28099PA080	HUB STAND (STI model)
ST2	927420000	HUB REMOVER

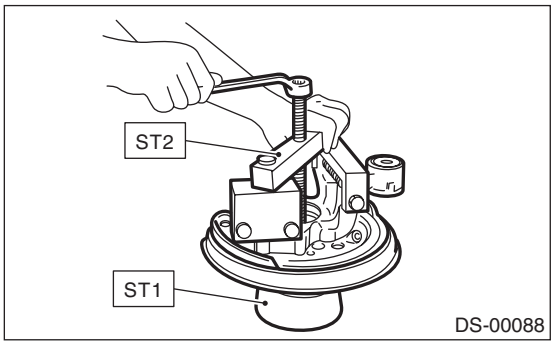

2) Remove the back plate from the rear housing
3) Remove the outer and inner oil seals using a flat tip screwdriver.

4) Remove the snap ring using a flat tip screwdriver.

NOTE:
Be careful not to damage housing during removal.

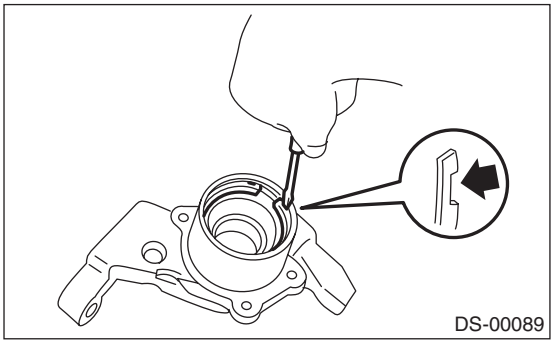

5) Using ST1 and ST2, remove the bearing by pressing the inner race.

ST1	927430000	HOUSING STAND (Except for STI model)
ST1	28099PA060	HOUSING STAND (STI model)
ST2	927440000	BEARING PULLER (Except for STI model)
ST2	927100000	BEARING PULLER (STI model)

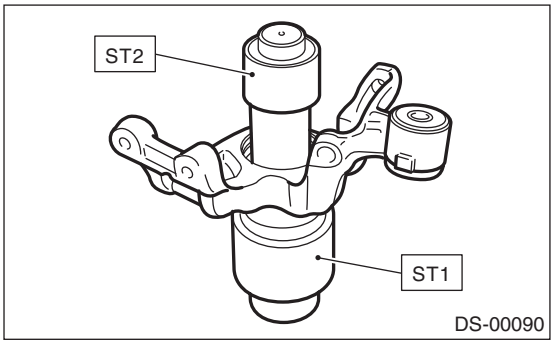

6) Remove the tone wheel bolts and remove the tone wheel from the hub.
7) Using ST, press the hub bolt out.

ST	927080000	HUB STAND (Except for STI model)
ST	28099PA080	HUB STAND (STI model)

CAUTION:
Be careful not to hammer the hub bolts. Doing so may deform the hub.

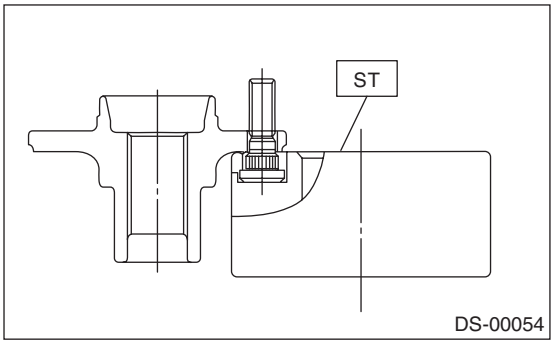

D: ASSEMBLY

NOTE:
When the hub is removed from the housing, replace the bearing set and oil seal.

1) Using the ST, press the new hub bolt into place.

NOTE:
- Make sure the hub bolt contacts the hub.
- Use the 12 mm (0.47 in) hole in the ST to prevent the hub bolt from tilting during installation.

ST	927080000	HUB STAND (Except for STI model)
ST	28099PA080	HUB STAND (STI model)

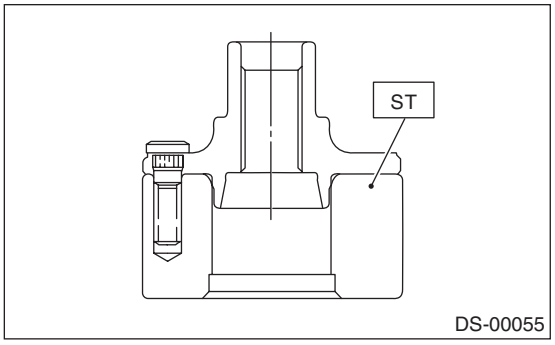

2) Remove the foreign particles (dust, rust, etc.) from the mating surfaces of hub tone wheel, and install the tone wheel to hub.

NOTE:
- Make sure the tone wheel contacts the hub.
- Be careful not to damage the tone wheel teeth.

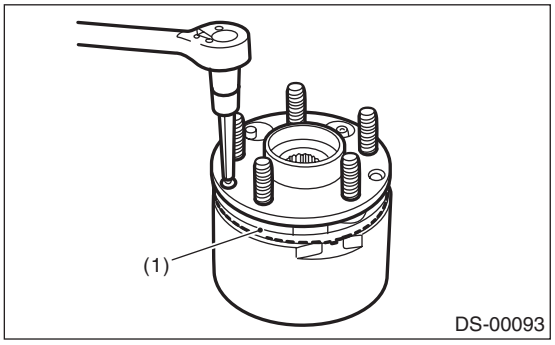

(1) Tone wheel

3) Clean the housing interior completely. Using ST1 and ST2, press the bearing into the housing.

ST1	927430000	HOUSING STAND (Except for STI model)
ST1	28099PA060	HOUSING STAND (STI model)
ST2	927440000	BEARING PULLER (Except for STI model)
ST2	927100000	BEARING PULLER (STI model)

NOTE:
Be careful not to remove the plastic lock from the inner race when installing the bearings.

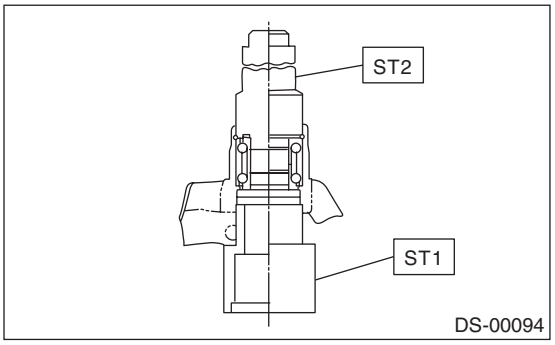

4) Using snap ring pliers, securely install the snap ring.

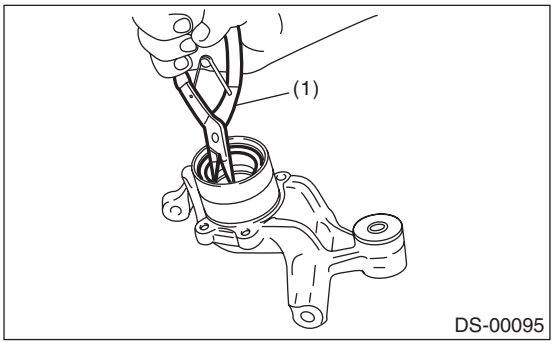

(1) Snap ring pliers

5) Using the ST1 and ST2, press the outer oil seal unit until it comes in contact with snap ring.

ST1	927430000	HOUSING STAND (Except for STI model)
ST1	28099PA060	HOUSING STAND (STI model)
ST2	927460000	OIL SEAL INSTALLER (Except for STI model)
ST2	28099PA070	OIL SEAL INSTALLER (STI model)

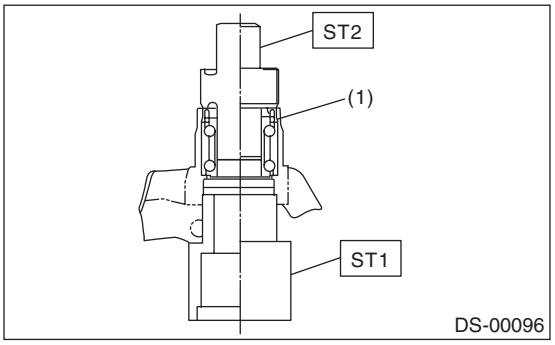

(1) Snap ring

6) Invert both ST1 and housing (upside down).

7) Using ST2, press the inner oil seal into the housing until it touches the bottom.

ST1	927430000	HOUSING STAND (Except for STI model)
ST1	28099PA060	HOUSING STAND (STI model)
ST2	927460000	OIL SEAL INSTALLER (Except for STI model)
ST2	28099PA070	OIL SEAL INSTALLER (STI model)

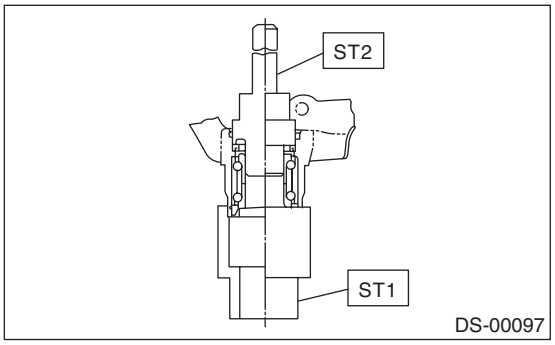

8) Using ST1 and ST2, press the sub seal into place.

ST1	927430000	HOUSING STAND (Except for STI model)
ST1	28099PA060	HOUSING STAND (STI model)
ST2	927460000	OIL SEAL INSTALLER (Except for STI model)
ST2	28099PA070	OIL SEAL INSTALLER (STI model)

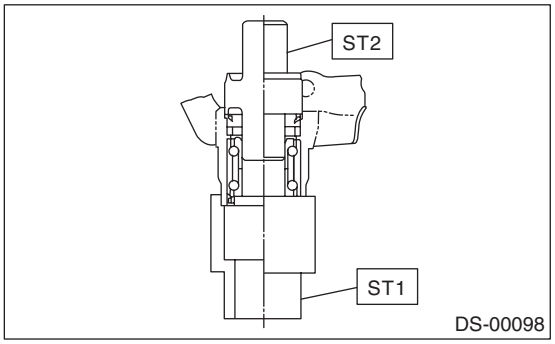

9) Apply sufficient grease to the oil seal lip.

Specified grease:
SHELL 6459N

NOTE:
- If specified grease is not available, remove the bearing grease and apply Auto Rex A instead.
- Do not mix different types of grease.

10) Install back plate to the rear housing.

Tightening torque:
52 N·m (5.3 kgf-m, 38.3 ft-lb)

11) Using ST1 and ST2, press the bearing into the hub.

ST1	927080000	HUB STAND (Except for STI model)
ST1	28099PA080	HUB STAND (STI model)
ST2	927450000	HUB INSTALLER (Except for STI model)
ST2	927120000	HUB INSTALLER (STI model)

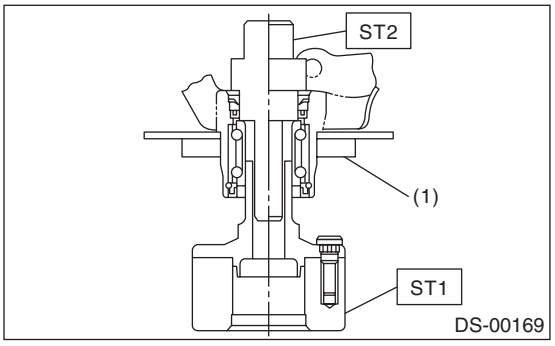

(1) Back plate

E: INSPECTION

1) Moving the rear tire up and down by hand, check there is no play in bearing, and check the wheel rotates smoothly.

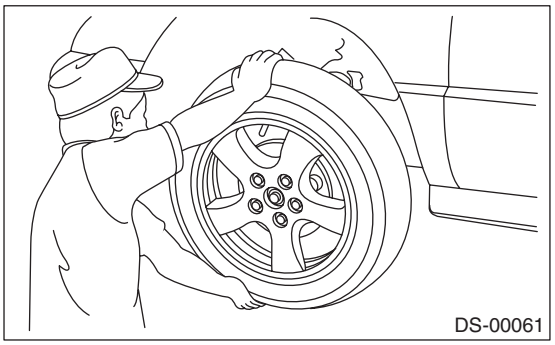

2) Inspect the lean of axis direction using a dial gauge. Replace the hub bearing if the play exceeds the limit value.
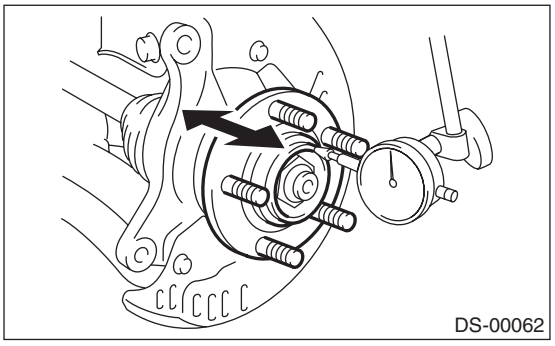
Service limit:
Maximum: 0.05 mm (0.0020 in)